8 027908 580962 >

D814275 0AA00_01 23-10-20

ACTUATOR FOR RACK SLIDING GATES

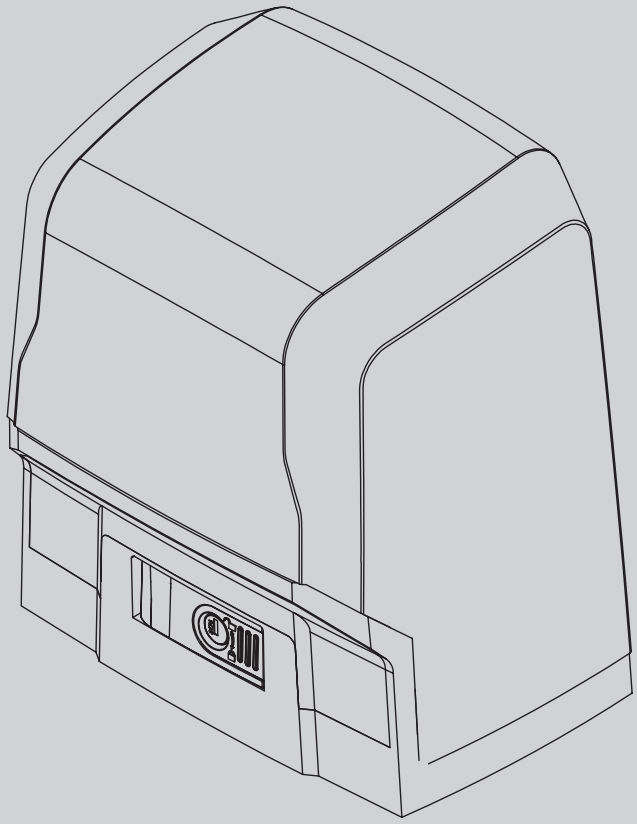

ARES VELOCE SMART BT A500
ARES VELOCE SMART BT A1000 /
ARES VELOCE SMART BT A1000 STEEL

INSTALLATION AND USER'S MANUAL

BFT

U-LINK

AZIENDA CON
SISTEMA DI GESTIONE
CERTIFICATO DA DNV GL
= ISO 9001 =
= ISO 14001 =

Caution! Read "Warnings" inside carefully!

FIG. 3

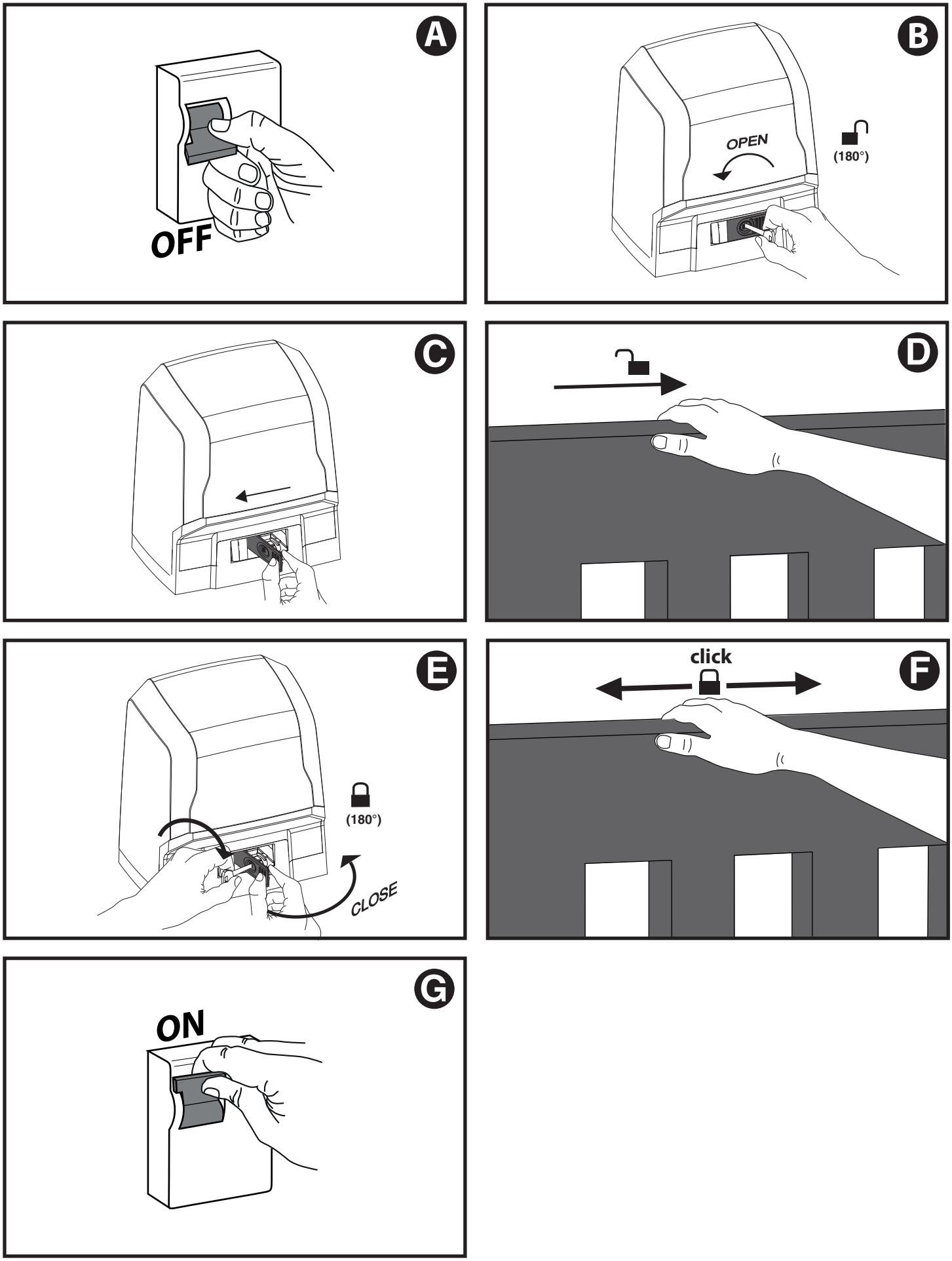

QUICK INSTALLATION

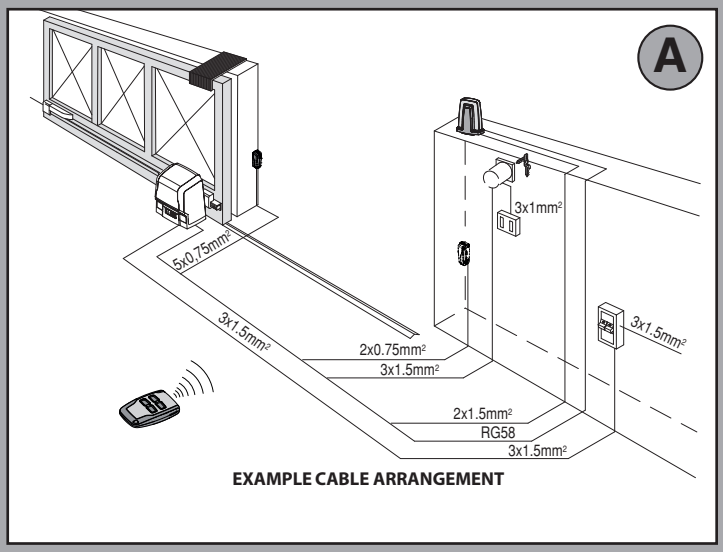

EXAMPLE CABLE ARRANGEMENT

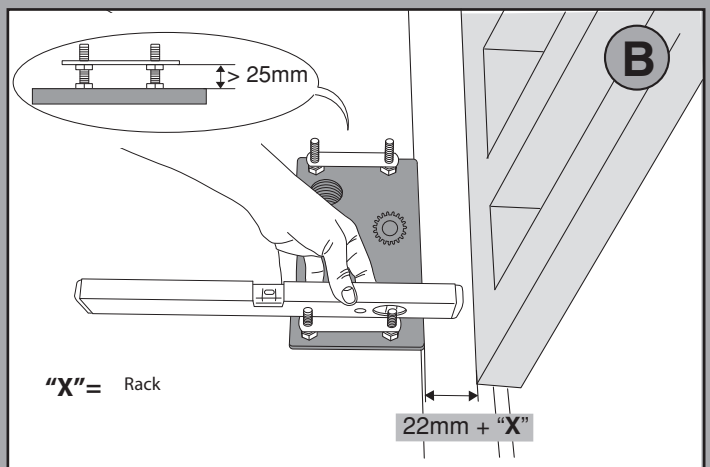

PREPARATION FOR MOTOR MOUNTING

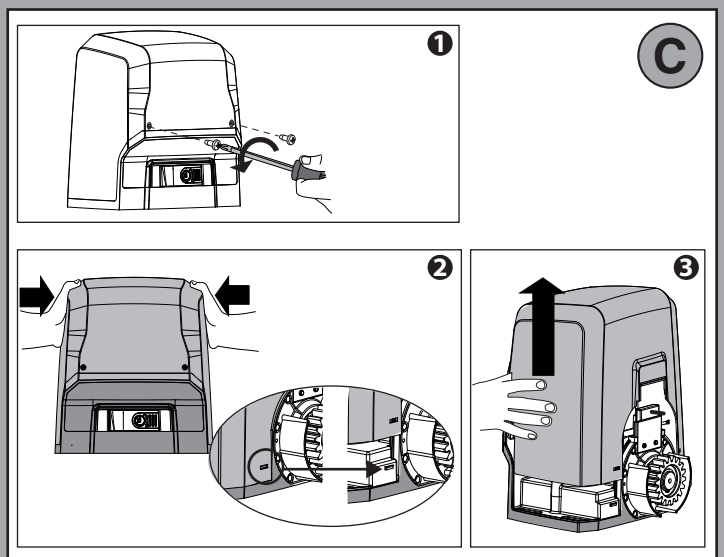

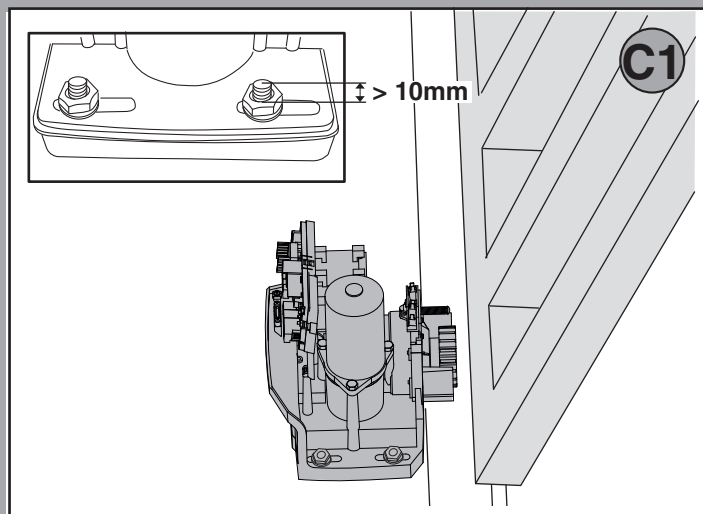

MOUNTING THE MOTOR

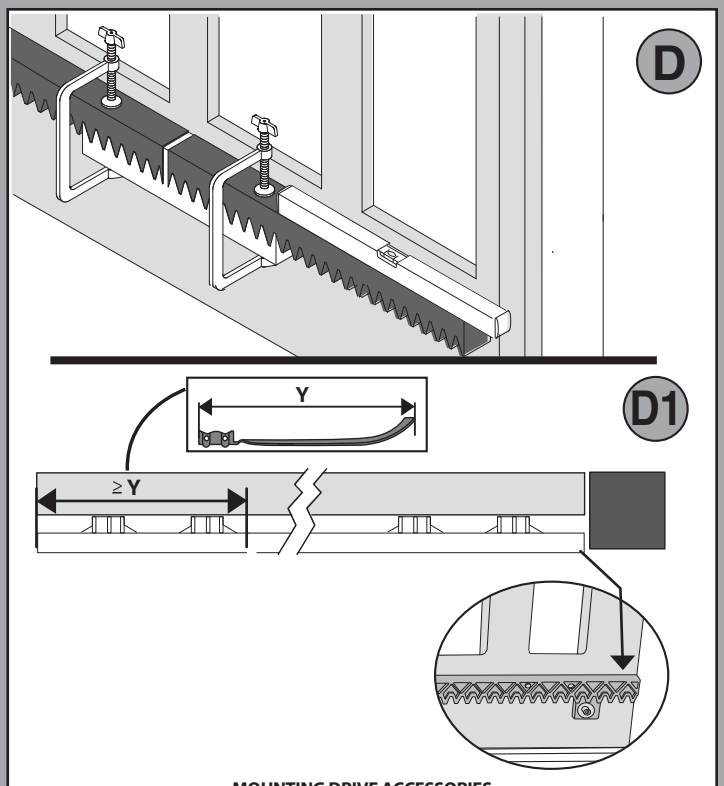

MOUNTING DRIVE ACCESSORIES

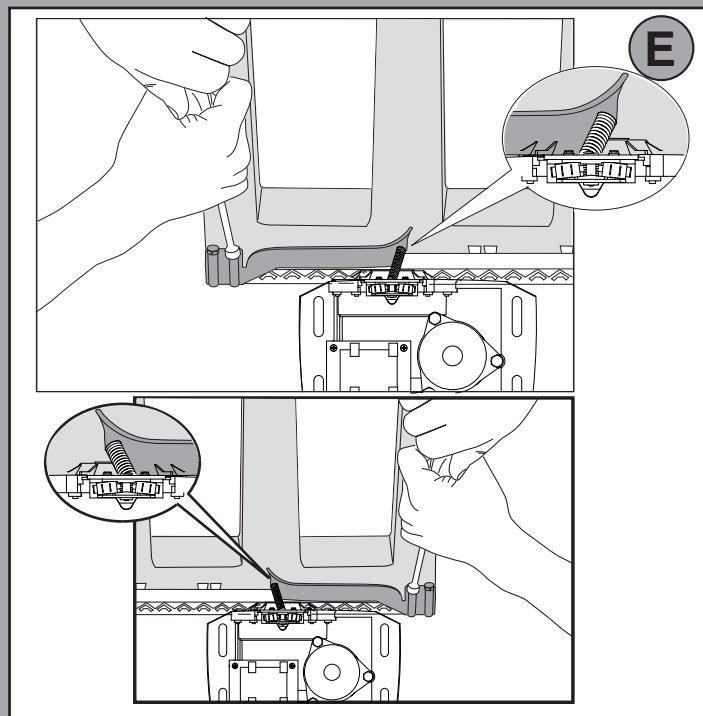

FASTENING LIMIT SWITCH BRACKETS (RH/LH)

TERMINAL BOARD WIRING

F

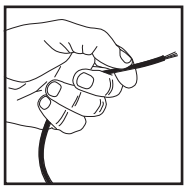

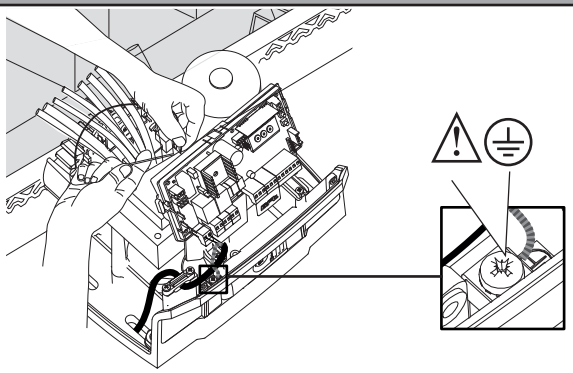

G

Display plus programming keys

Brake control connector

Palmtop programmer connector

Connettore scheda opzionale,
Optional board connector,
Connecteur carte facultative,
Steckverbinder Zusatzkarte,
Conector de la tarjeta opcional,
Connector optionele kaart.

FAULT 2
SAFE 2 — NC
FAULT 1
SAFE 1 — NC
STOP — NC
COM
Safety devices

IC 2 — NO
IC 1 — NO
COM
Commands

24 VSafe
24V ~ (+)
24V ~ (-)
Accessories power supply

SWO **
SWC **
+ REF SWE
***
Limit switch connector

AUX 3 (MAX 24V 1A)
AUX 0 (MAX 1A)
AUX

Motor

N
L
220-230V *2
Power supply

F3 1,25A T

F1 1,6 AT (220-230V)
F1 3,15 AT (110-120V)

24V~

**

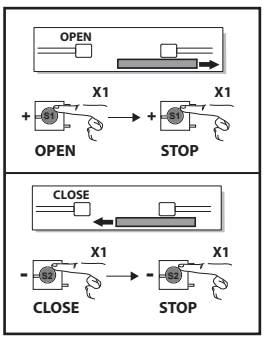

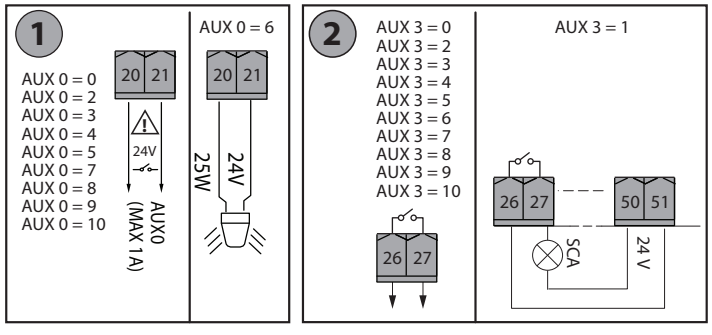

***

Unlocking sensor

**With reverse logic, opening direction = 000 (DIR=right)

H1

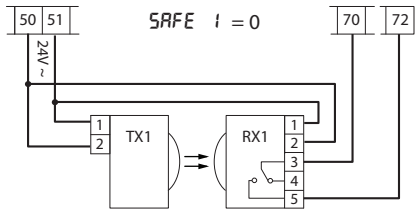

Photocells not checked (Check every 6 months)

H2

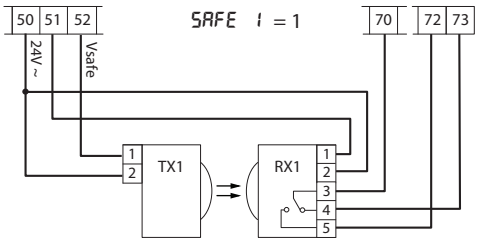

Photocell checked

ACTIVATION OF MECHANICAL RELEASE OF THE MOTOR

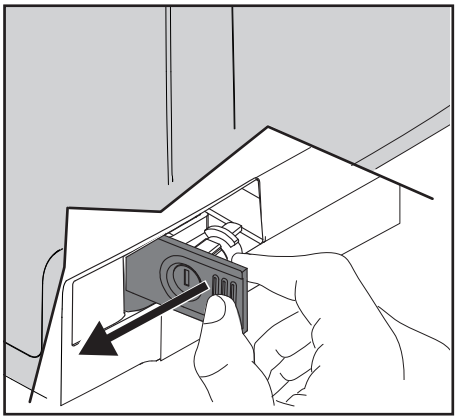

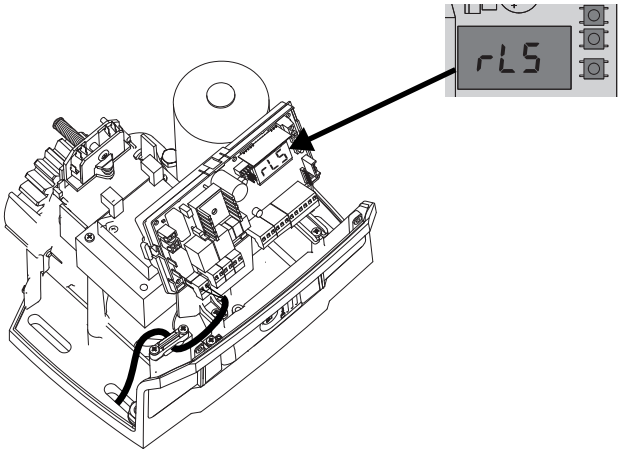

The following manoeuvre will be performed at low speed.

SIMPLIFIED MENU (FIG.1)

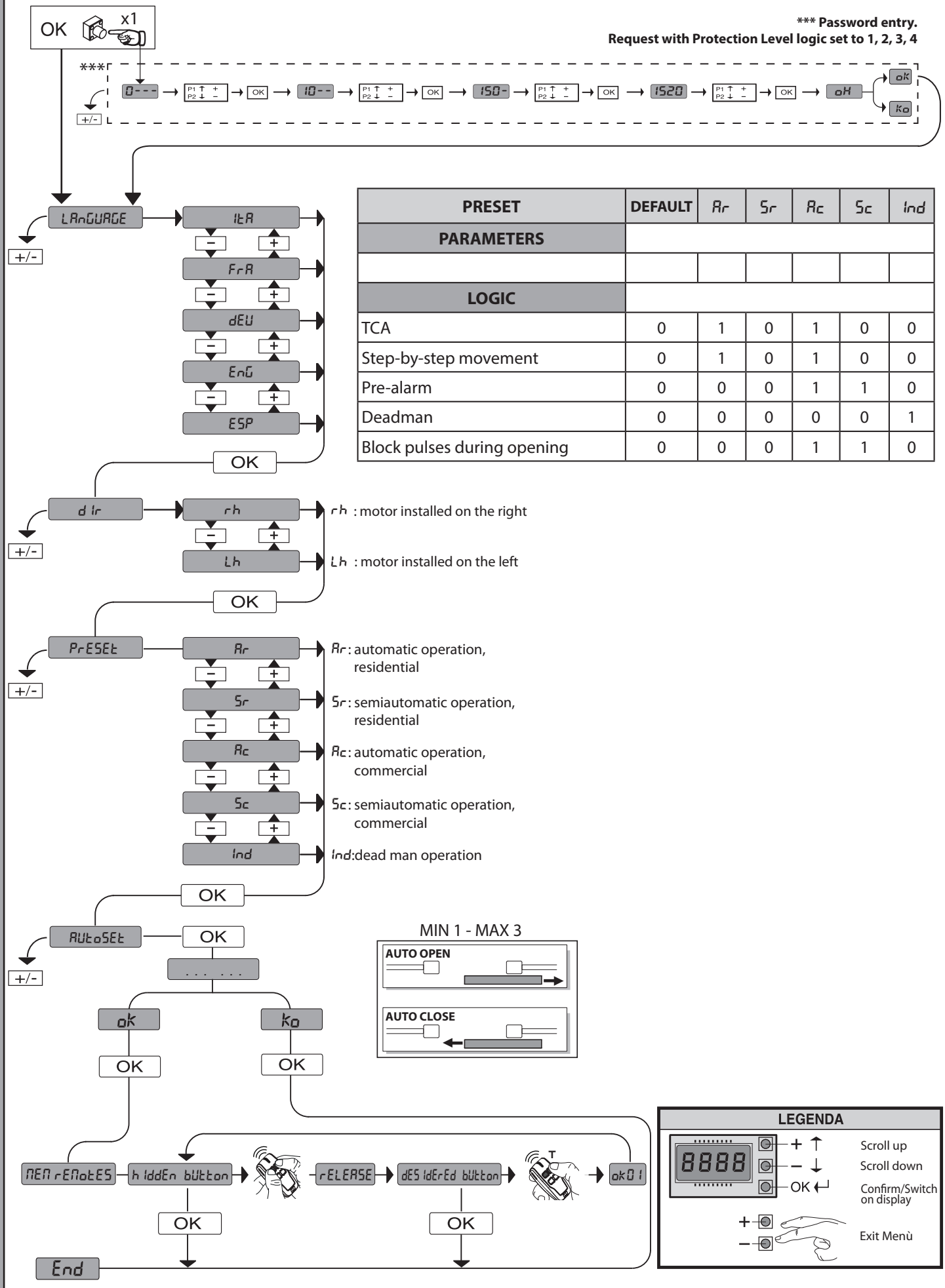

PRESET	DEFAULT	Ar	Sr	Ac	Sc	Ind
PARAMETERS						
LOGIC						
TCA	0	1	0	1	0	0
Step-by-step movement	0	1	0	1	0	0
Pre-alarm	0	0	0	1	1	0
Deadman	0	0	0	0	0	1
Block pulses during opening	0	0	0	1	1	0

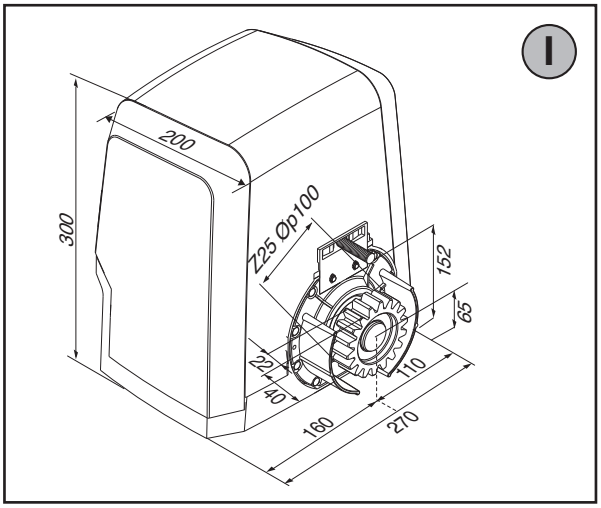
I
200
300
Z25 Øp100
152
65
22
40
110
160
270

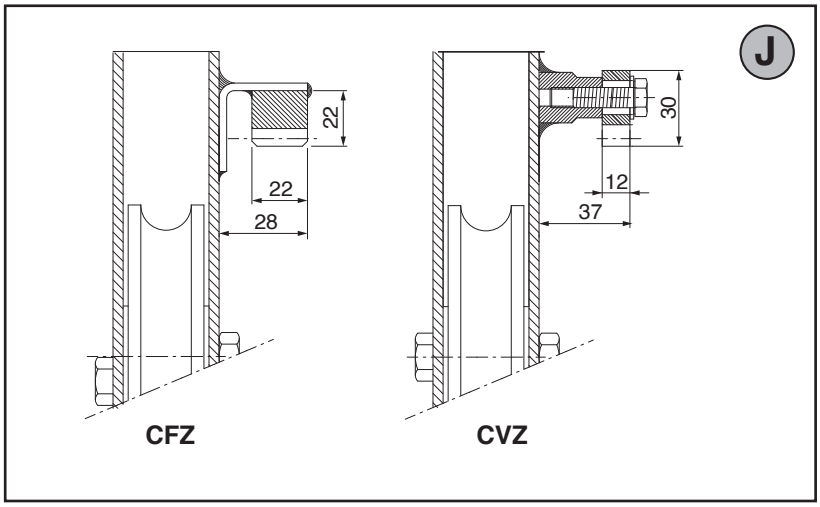
J
22
22
28
30
12
37
CFZ
CVZ

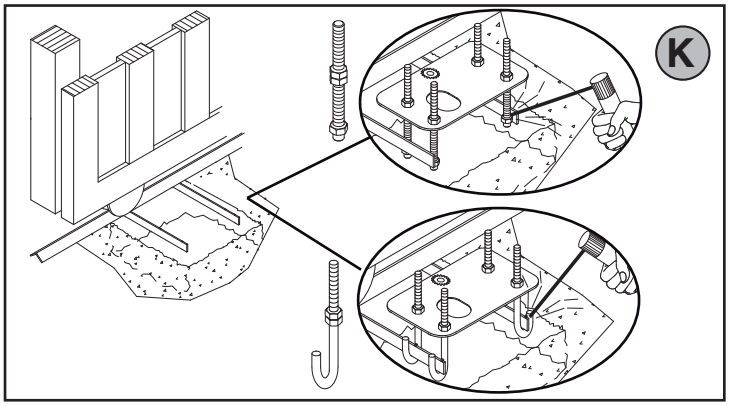
K

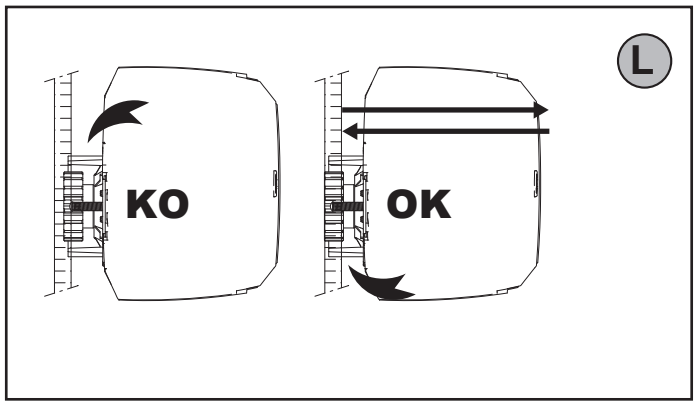
L
KO
OK

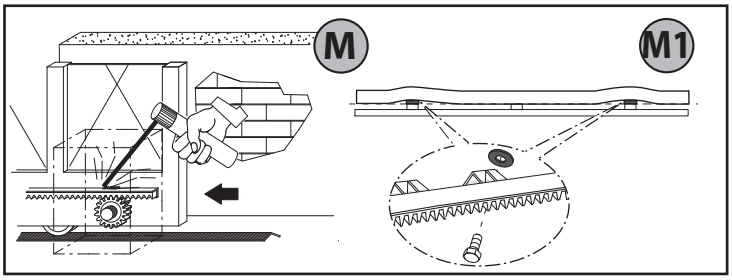
M
M1

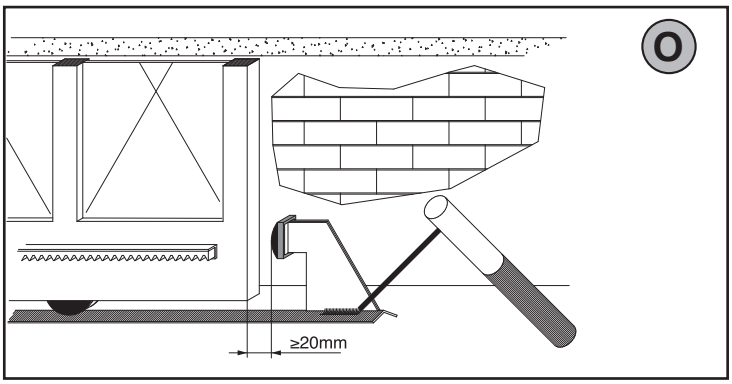
O
≥20mm

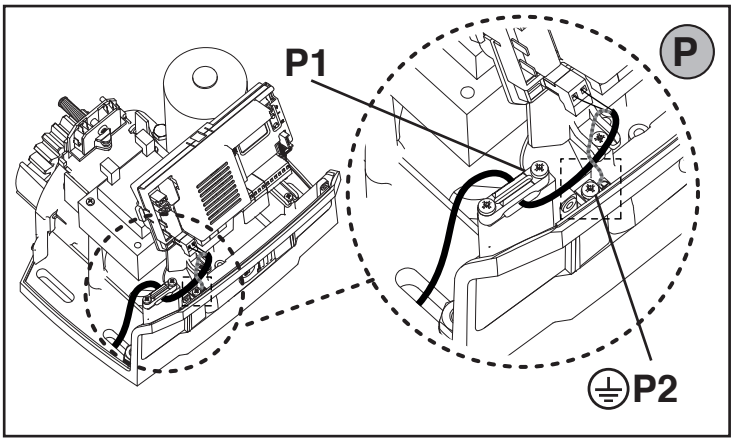
P
P1
P2

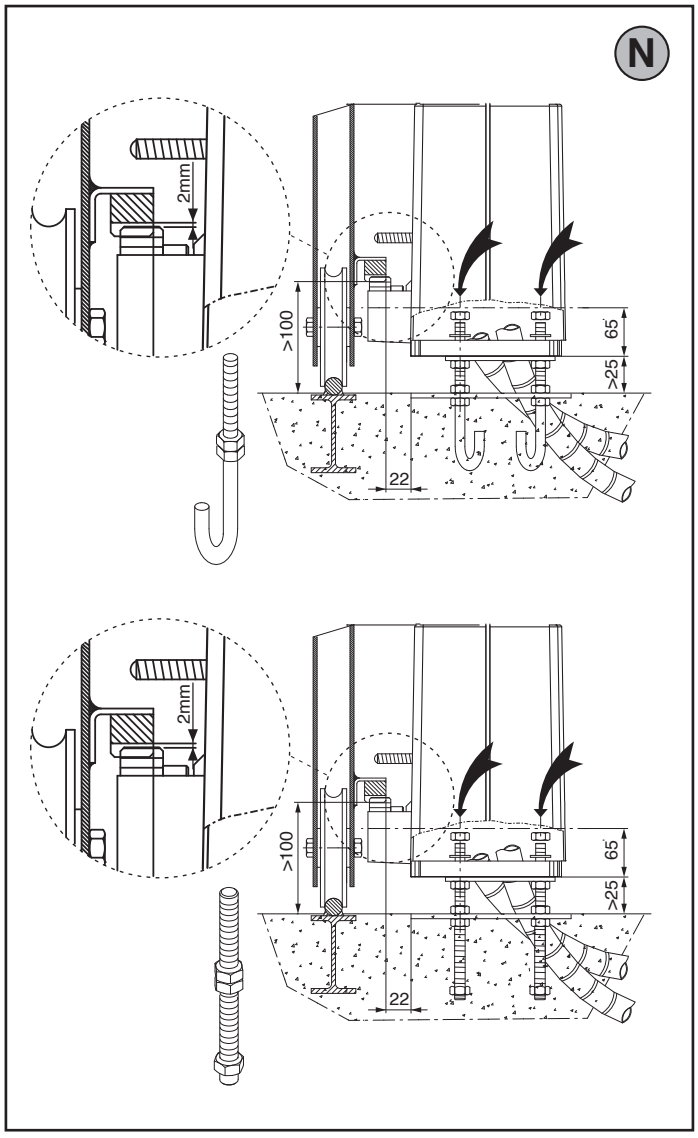
N
2mm
>100
65
≥25
22
2mm
>100
65
≥25
22

Q

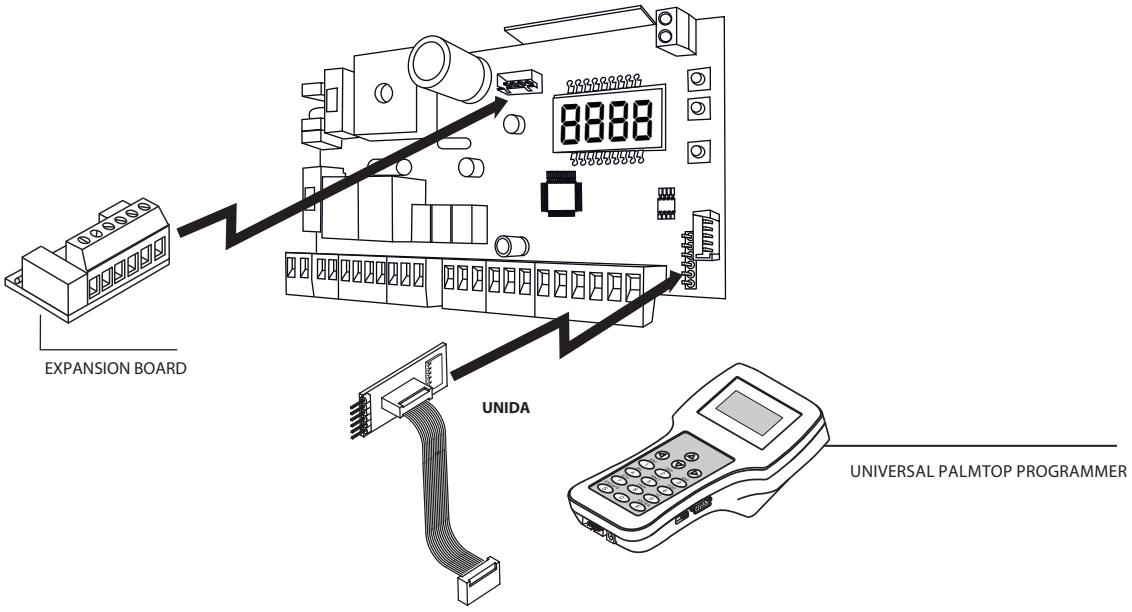

R

AddrESS = **0**

SErIAL ModE = **3**

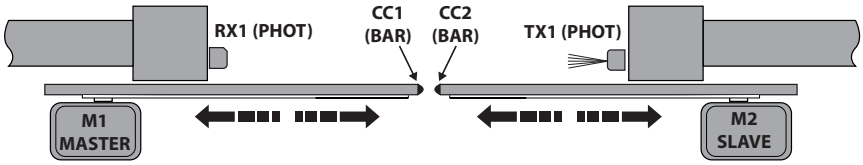

AddrESSE = **0**

SErIAL ModE = **2**

SAMPLE APPLICATION WITH OPPOSITE LEAVES WITH 1 PHOT AND 2 BAR

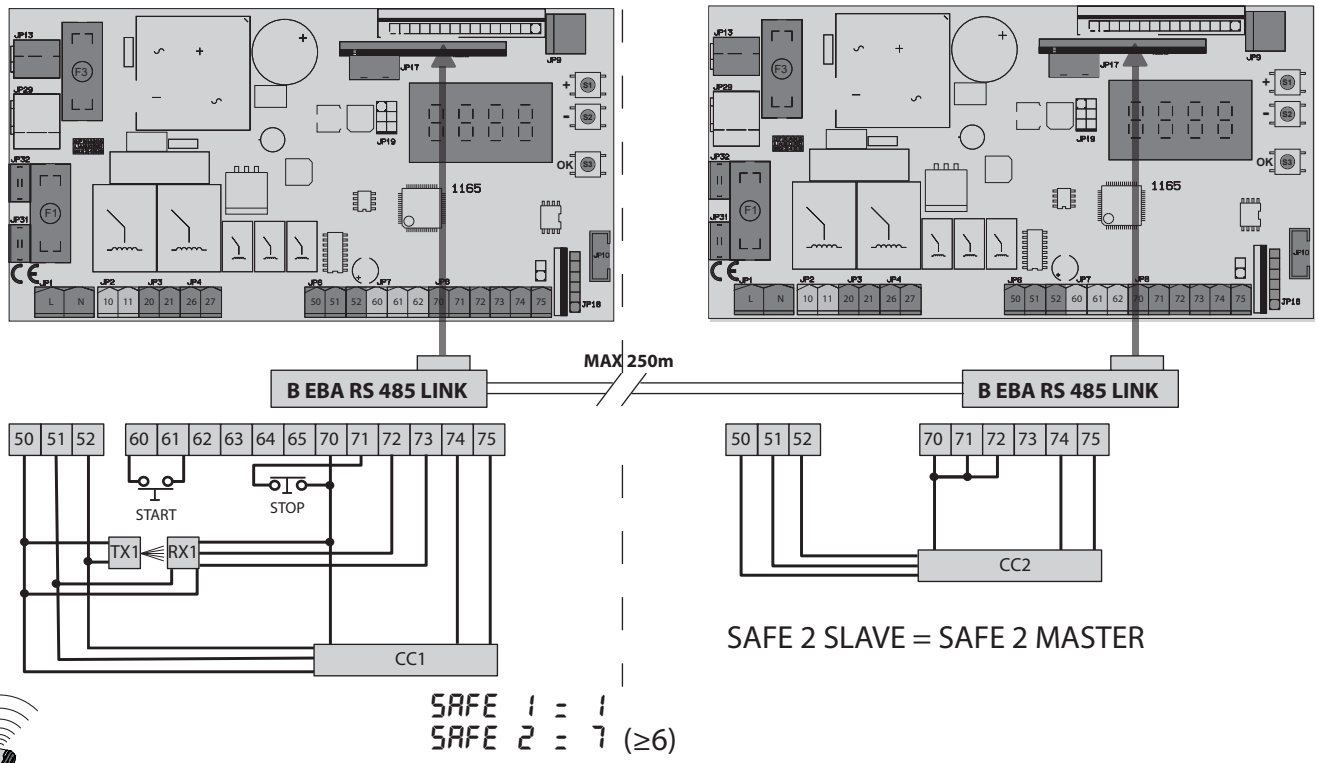

SAFE 2 SLAVE = SAFE 2 MASTER

SAFE 1 = 1
SAFE 2 = 7 (≥6)

THE AUTO-SET MUST BE PERFORMED SEPARATELY ON THE 2 LEAVES BEFORE SETTING THE FUNCTION OF THE OPPOSITE LEAVES.

TO CONNECT SEVERAL PHOTOCELLS, REFER TO FIG. T

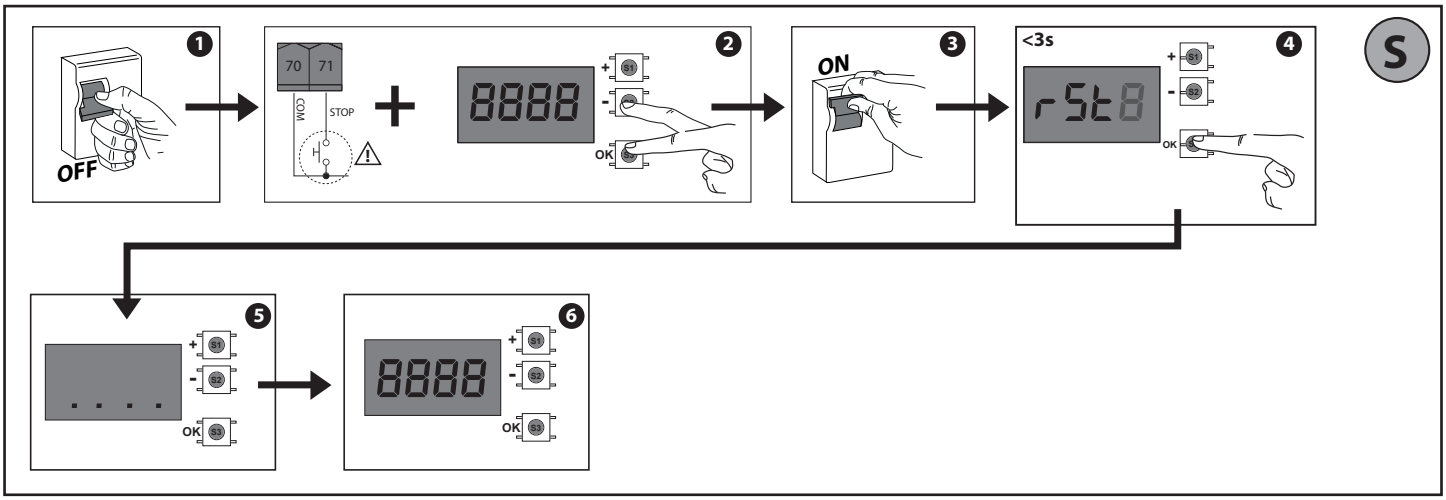
S
OFF
70 71
COM
STOP
8888
OK
ON
<3s
rSt8
OK
8888
OK

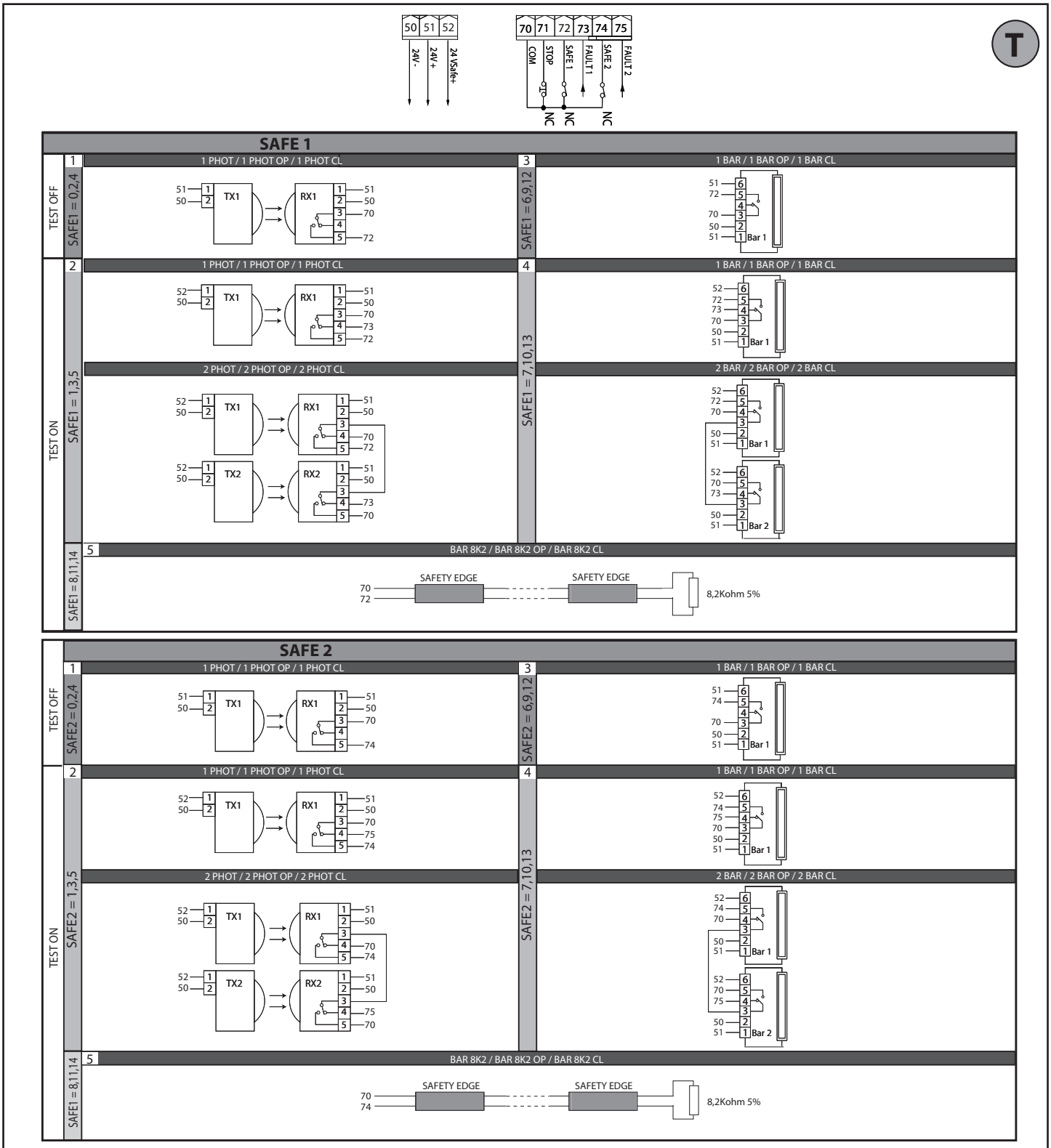
T
50 51 52
24V -
24V +
24 VSafe+
70 71 72 73 74 75
COM
STOP
SAFE 1
FAULT 1
SAFE 2
FAULT 2
NC
NC
NC
SAFE 1
TEST OFF
SAFE1 = 0,2,4
1 PHOT / 1 PHOT OP / 1 PHOT CL
TX1
RX1
SAFE1 = 6,9,12
1 BAR / 1 BAR OP / 1 BAR CL
Bar 1
TEST ON
SAFE1 = 1,3,5
1 PHOT / 1 PHOT OP / 1 PHOT CL
2 PHOT / 2 PHOT OP / 2 PHOT CL
TX2
RX2
SAFE1 = 7,10,13
1 BAR / 1 BAR OP / 1 BAR CL
2 BAR / 2 BAR OP / 2 BAR CL
Bar 2
SAFE1 = 8,11,14
BAR 8K2 / BAR 8K2 OP / BAR 8K2 CL
SAFETY EDGE
SAFETY EDGE
8,2Kohm 5%
SAFE 2
TEST OFF
SAFE2 = 0,2,4
1 PHOT / 1 PHOT OP / 1 PHOT CL
SAFE2 = 6,9,12
1 BAR / 1 BAR OP / 1 BAR CL
TEST ON
SAFE2 = 1,3,5
1 PHOT / 1 PHOT OP / 1 PHOT CL
2 PHOT / 2 PHOT OP / 2 PHOT CL
SAFE2 = 7,10,13
1 BAR / 1 BAR OP / 1 BAR CL
2 BAR / 2 BAR OP / 2 BAR CL
SAFE1 = 8,11,14
BAR 8K2 / BAR 8K2 OP / BAR 8K2 CL
SAFETY EDGE
SAFETY EDGE
8,2Kohm 5%

U

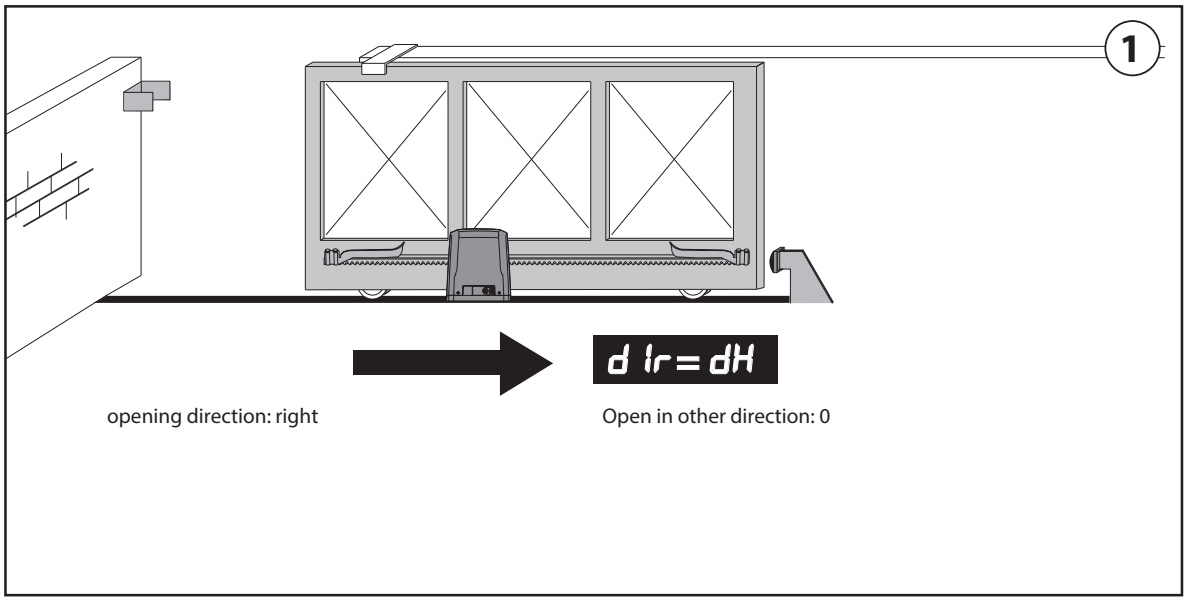

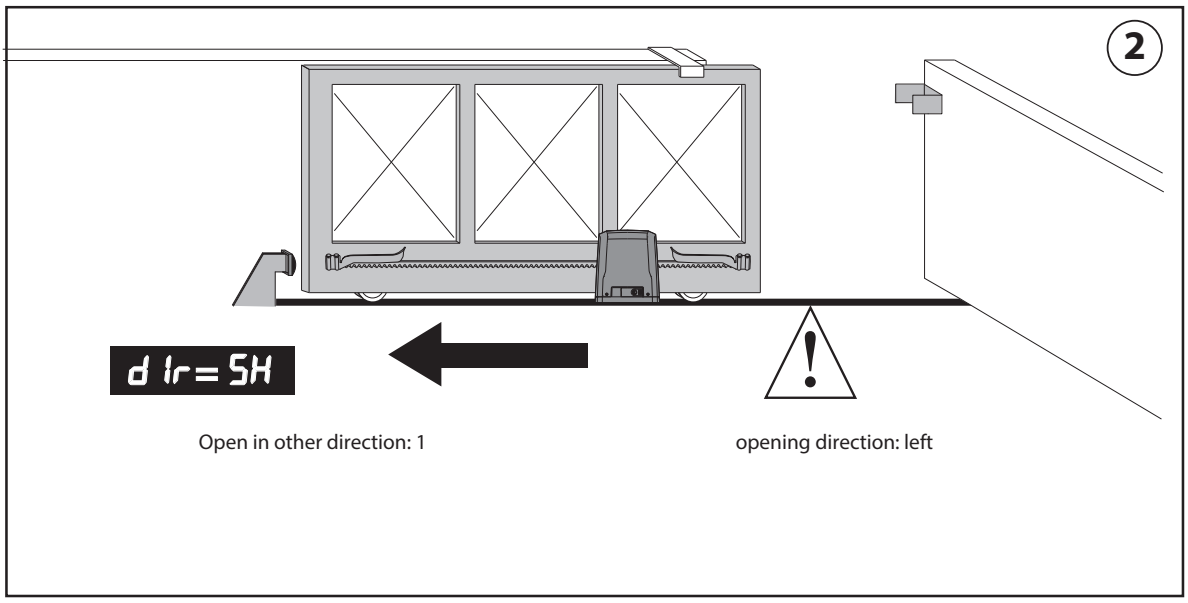

- When switching logic configuration from right to left opening, do not swap over the original connection of terminal JP10.
-

ACCESS MENUS Fig. 2

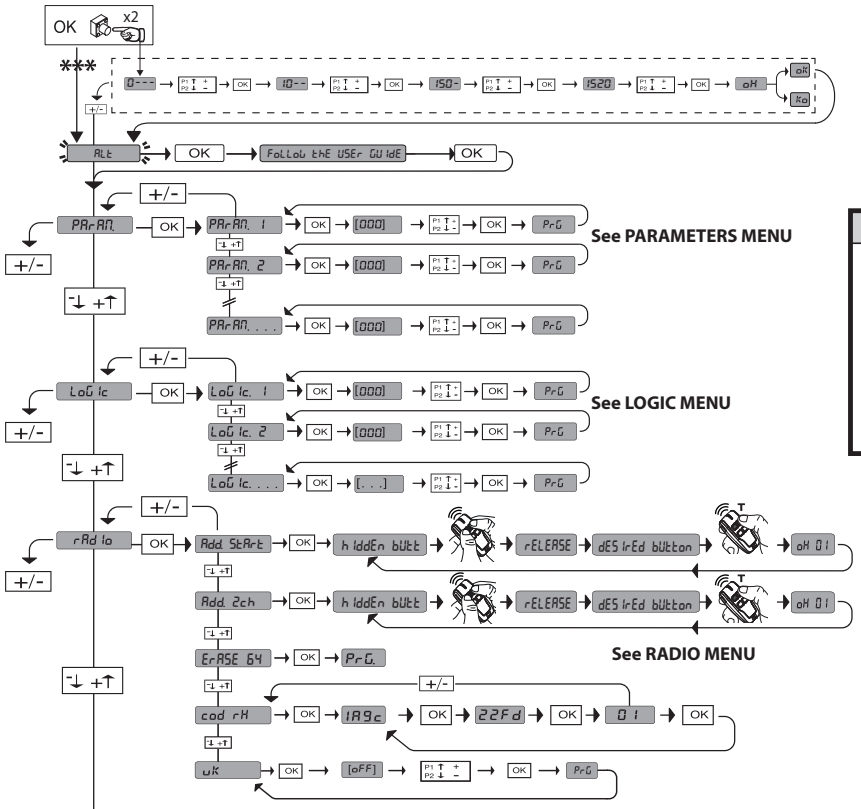

***** Password entry.**
Request with Protection Level logic set to 1, 2, 3, 4

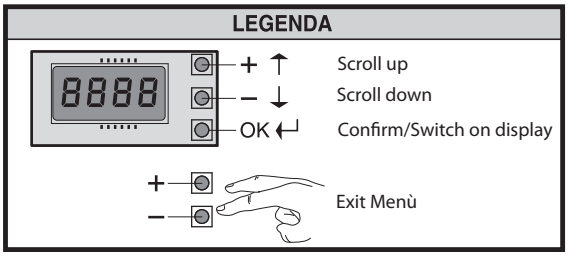

Diagnostics code	DESCRIPTION	NOTES
StrE	START E external start input activated	
Str I	START I internal start input activated	
oPEn	OPEN input activated	
cLS	CLOSE input activated	
PEd	PED pedestrian input activated	
t IME	TIMER input activated	
StoP	STOP input activated	
Phot	PHOT photocell input activated	
PhoP	PHOT OP opening photocell input activated	
PhcL	PHOT CL closing photocell input activated	
bAr	BAR safety edge input activated	
bAr 2	BAR safety edge input activated on slave motor (opposite leaves connection)	
bArO	Activation of BAR safety edge input with ACTIVE reversal ONLY WHILE OPENING, or, if configured as verified safety edge active only while opening, Activation of the associated FAULT input	
bArC	Activation of BAR safety edge input with ACTIVE reversal ONLY WHILE CLOSING, or, if configured as verified safety edge active only while closing, Activation of the associated FAULT input	
SUc	SWC motor closing limit switch input activated	
SUo	SWO motor opening limit switch input activated	
SEt	The board is standing by to perform a complete opening-closing cycle uninterrupted by intermediate stops in order to acquire the torque required for movement. WARNING! Obstacle detection not active	
rLS	Activation of mechanical release of the motor. The following manoeuvre will be performed at low speed.	
Er01	Photocell test failed	Check photocell connection and/or logic settings
Er02	Safety edge test failed	Check safety edge connection and/or logic settings
Er03	Opening photocell test failed	Check photocell connection and/or parameter/logic setting
Er04	Closing photocell test failed	Check photocell connection and/or parameter/logic setting
Er05	Safety edge test on slave motor failed (opposite leaves connection)	Check safety edge connection and/or parameter/logic settings
Er06	8k2 safety edge test failed	Check safety edge connection and/or parameter/logic settings
Er07	Opening safety edge test failed	Check safety edge connection and/or parameter/logic settings
Er08	Closing safety edge test failed	Check safety edge connection and/or parameter/logic settings
Er 1H*	Board hardware test error	- Check connections to motor - Hardware problems with board (contact technical assistance)
Er3H*	Reverse due to obstacle - Amperostop	Check for obstacles in path
Er4H*	Thermal cutout	Allow automated device to cool
Er5H*	Communication error with remote devices	Check connection with serial-connected accessory devices and/or expansion boards
Er70, Er71 Er74, Er75	Internal system supervision control error.	Try switching the board off and back on again. If the problem persists, contact the technical assistance department.
Er72	Consistency error of the control unit's parameters (Logics and Parameters)	Pressing OK the detected settings are confirmed. The board will keep on working with the detected settings. ⚠ **The board settings must be checked** (Parameters and Logics)
Er73	D-track parameter error	Pressing OK, the board will keep on working with D-track as a default. ⚠ **An autoset is required**
ErF0	Limit switch error	check limit switch connections
ErF1	Limit switch error always active after operation start	Check limit switch and motor connections
ErF3	Error in setting the SAFE inputs	Check the setting of the SAFE inputs is correct

* *H* = 0,1,…,9,A,B,C,D,E,F

INSTALLATION MANUAL

1) GENERAL INFORMATION

The **ARES VELOCE SMART BT A500-BT A1000-BT A1000 STEEL** actuator is highly versatile in terms of installation options due to the extremely low position of the pinion, the actuator's compact nature and the height and depth adjustment features it offers. The adjustable electronic torque limiter provides anti-crush safety. Manual emergency operation is extremely easy to perform using just a release lever.
Stopping at end of travel is controlled by electromechanical microswitches.
The **MERAK SV** control panel comes with standard factory settings. Any change must be made using the programmer with built-in display or universal handheld programmer.
Fully supports EELINK and U-LINK protocols.
Its main features are:
- Control of 1 low-voltage motor
- Obstacle detection
- Separate inputs for safety devices
- Configurable command inputs
- Built-in radio receiver rolling code with transmitter cloning.

The board has a terminal strip of the removable kind to make maintenance or replacement easier. It comes with a series of prewired jumpers to make the installer's job on site easier. The jumpers concern terminals: 70-71, 70-72, 70-74. If the above-mentioned terminals are being used, remove the relevant jumpers.

⚠ "Installation must be carried out by qualified personnel (professional installer, according to EN 12635), in compliance with Good Practice and current code"

⚠ **WARNINGS - Protect the dangerous rims according to the provisions of the EN12453 regulation, applying active edges and using the SAFE1 and SAFE2 inputs.**
For obstacle detection, apply a safety edge: ASO SENTIR EDGE 115SK / BIRCHER EP45x99A1 (NOT SUPPLIED)

TESTING
The **MERAK SV** panel controls (checks) the start relays and safety devices (photocells) before performing each opening and closing cycle.
If there is a malfunction, make sure that the connected devices are working properly and check the wiring.

2) TECHNICAL SPECIFICATIONS

MOTOR		
	500	**1000/1000 STEEL**
Power supply	110-120V 50/60Hz 220-230V 50/60 Hz(*)	220-230V 50/60 Hz
Power input	400 W	
Pinion module	4mm (25 teeth)	4mm (18 teeth)
Speed (No load)	25 m/min	18 m/min
Speed (at a torque of 4 Nm, corresponding to a force of 80 N)	22 m/min	15 m/min
Max. leaf weight	500 Kg	1000 Kg
Max. torque	20 Nm	
Impact reaction	Electronic torque limiter	
Lubrication	Lifetime greased	
Manual operation	Lever-operated mechanical release	
Type of use	intensive	
Buffer batteries (optional extras)	Two 12V 1.2Ah batteries	
Environmental conditions	-20 / +55°C	
Protection rating	IP24	
Noise level	<70dBA	
Operator weight	7 kg	
Dimensions	See Fig. I	
CONTROL UNIT		
Low voltage/mains insulation	> 2MOhm 500V ⎓	
Operating temperature range	-20 / +55°C	
Thermal overload protection	Software	
Dielectric rigidity	mains/LV 3750V~ for 1 minute	
Accessories power supply	24V ~ (demand max. 0,5A) 24V ~ safe	
AUX 0	NO 24V ~ powered contact (max.1A)	
AUX 3	NO contact (24V~/max.1A)	
Fuses	Fig. G	
Built-in Rolling-Code radio-receiver	frequency 433.92MHz	
Setting of parameters and options	Universal handheld programmer/LCD display	
N° of combinations	4 billion	
Max. n° of remotes that can be memorized	63	

(*other voltages to order)

Usable transmitter versions:
All ROLLING CODE transmitters compatible with ((ER-Ready)).

USE CYCLE	continuous	30 cycles / h	25 cycles / h
OPERATING TEMPERATURE RANGE	40 °C	50 °C	55 °C

3) TUBE ARRANGEMENT Fig.A

Install the electrical system referring to the standards in force for electrical systems CEI 64-8, IEC 364, harmonization document HD 384 and other national standards.

4) PREPARATION FOR MOTOR MOUNTING FIG.B

Make a hole in the ground to accommodate the concrete pad where the tie rods will be positioned, keeping to the distances featured in (**FIG.B**).

5) REMOVING THE COVER FIG.C

5.1) MOUNTING THE MOTOR FIG.C1

6) MOUNTING DRIVE ACCESSORIES FIG.D-D1

Recommended rack types (**FIG.J**)

7) RACK CENTRING WITH RESPECT TO PINION FIG.J-K1-L

⚠ **DANGER - Welding must be performed by a competent person issued with the necessary personal protective equipment as prescribed by the safety rules in force FIG.K.**

8) FASTENING LIMIT SWITCH BRACKETS FIG.E

9) STOPS FIG. O

⚠ **DANGER - The gate must be fitted with mechanical stops to halt its travel both when opening and closing, thus preventing the gate from coming off the top guide. Said stops must be fastened firmly to the ground, a few centimetres beyond the electric stop point.**

10) MANUAL RELEASE (See USER GUIDE -FIG.3-).

Warning Do not JERK the gate open and closed, instead push it GENTLY to the end of its travel.

11) TERMINAL BOARD WIRING Fig. G-P

Once suitable electric cables have been run through the raceways and the automated device's various components have been fastened at the predetermined points, the next step is to connect them as directed and illustrated in the diagrams contained in the relevant instruction manuals. Connect the live, neutral and earth wire (compulsory). The mains cable must be clamped in the relevant cable gland **(FIG.G-ref.P1)**, while the earth wire with the yellow/green-coloured sheath must be connected in the relevant terminal **(FIG.G-ref.P2).**

WARNINGS - When performing wiring and installation, refer to the standards in force and, whatever the case, apply good practice principles. Wires carrying different voltages must be kept physically separate from each other, or they must be suitably insulated with at least 1mm of additional insulation.
Wires must be secured with additional fastening near the terminals, using devices such as cable clamps. All connecting cables must be kept far enough away from dissipaters.

11.1) LOCAL COMMANDS Fig.G

While the display is off, pressing the + key commands the gate to Open and pressing the - key commands it to Close. Pressing either key again while the automated device is moving commands the gate to STOP.

12) SAFETY DEVICES

Note: only use receiving safety devices with free changeover contact.

12.1) TESTED DEVICES Fig.S

12.2) CONNECTION OF 1 PAIR OF NON-CHECKED PHOTOCELLS FIG. H1

12.3) CONNECTION OF 1 PAIR OF NON-CHECKED PHOTOCELLS FIG. H2

13) ACCESS TO THE SIMPLIFIED MENU: FIG.1

13.1) CALLING UP MENUS: FIG. 2

13.2) PARAMETERS MENU (PArAM) (PARAMETERS TABLE "A")

13.3) LOGIC MENU (LoGIC) (LOGIC TABLE "B")

13.4) RADIO MENU (rAd Io) (RADIO TABLE "C")

- **IMPORTANT NOTE: THE FIRST TRANSMITTER MEMORIZED MUST BE IDENTIFIED BY ATTACHING THE KEY LABEL (MASTER).**

In the event of manual programming, the first transmitter assigns the RECEIVER'S KEY CODE: this code is required to subsequently clone the radio transmitters.
The Clonix built-in on-board receiver also has a number of important advanced features:
- Cloning of master transmitter (rolling code or fixed code).
- Cloning to replace transmitters already entered in receiver.
- Transmitter database management.
- Receiver community management.

To use these advanced features, refer to the universal handheld programmer's instructions and to the general receiver programming guide.

13.5) DEFAULT MENU (dEFAULt)

Restores the controller's DEFAULT factory settings. Following this reset, you will need to run the AUTOSET function again.

	Terminal	Definition	Description
Power supply	L	LINE	Single-phase power supply
	N	NEUTRAL	
	JP31	TRANSF PRIM	Transformer primary winding connection
	JP32		
	JP13	TRANSF SEC	Board power supply: 24V~ Transformer secondary winding
Motor	10	MOT +	Connection motor 1
	11	MOT -	
Aux	20	AUX 0 - 24V POWERED CONTACT (N.O.) (MAX. 1A)	AUX 0 configurable output - Default setting FLASHING LIGHT. 2ND RADIO CHANNEL/ SCA GATE OPEN LIGHT/ COURTESY LIGHT command/ ZONE LIGHT command/ STAIR LIGHT/ GATE OPEN ALARM/ FLASHING LIGHT/ SOLENOID LATCH/ MAGNETIC LOCK/ MAINTENANCE/ FLASHING LIGHT AND MAINTENANCE. Refer to "AUX output configuration" table.
	21		
	26	AUX 3 - FREE CONTACT (N.O.) (Max. 24V 1A)	AUX 3 configurable output - Default setting 2ND RADIO CHANNEL Output. 2ND RADIO CHANNEL/ SCA GATE OPEN LIGHT/ COURTESY LIGHT command/ ZONE LIGHT command/ STAIR LIGHT/ GATE OPEN ALARM/ FLASHING LIGHT/ SOLENOID LATCH/ MAGNETIC LOCK/ MAINTENANCE/ FLASHING LIGHT AND MAINTENANCE. Refer to "AUX output configuration" table.
	27		
Limit switches	41	+REF SWE	Limit switch common
	42	SWC	Closing limit switch SWC (N.C.)
	43	SWO	Opening limit switch SWO (N.C.)
Accessories power supply	50	24V~ (-)	Accessories power supply output.
	51	24V ~ (+)	
	52	24 Vsafe	Tested safety device power supply output (photocell transmitter and safety edge transmitter). Output active only during operating cycle.
Commands	60	Common	IC 1 and IC 2 inputs common
	61	IC 1	Configurable command input 1 (N.O.) - Default START E. START E / START I / OPEN / CLOSE / PED / TIMER / TIMER PED Refer to the "Command input configuration" table.
	62	IC 2	Configurable command input 2 (N.O.) - Default PED. START E / START I / OPEN / CLOSE / PED / TIMER / TIMER PED Refer to the "Command input configuration" table.
Safety devices	70	Common	STOP, SAFE 1 and SAFE 2 inputs common
	71	STOP	The command stops movement. (N.C.) If not used, leave jumper inserted.
	72	SAFE 1	Configurable safety input 1 (N.C.) - Default PHOT. PHOT / PHOT TEST / PHOT OP / PHOT OP TEST / PHOT CL / PHOT CL TEST / BAR / BAR TEST / BAR 8K2 / BAR OP / BAR OP TEST / BAR 8K2 OP/ BAR CL / BAR CL TEST / BAR 8K2 CL Refer to the "Safety input configuration" table.
	73	FAULT 1	Test input for safety devices connected to SAFE 1.
	74	SAFE 2	Configurable safety input 2 (N.C.) - Default BAR. PHOT / PHOT TEST / PHOT OP / PHOT OP TEST / PHOT CL / PHOT CL TEST / BAR / BAR TEST / BAR 8K2 / BAR OP / BAR OP TEST / BAR 8K2 OP/ BAR CL / BAR CL TEST / BAR 8K2 CL Refer to the "Safety input configuration" table.
	75	FAULT 2	Test input for safety devices connected to SAFE 2.
Antenna	Y	ANTENNA	Antenna input. Use an antenna tuned to 433MHz. Use RG58 coax cable to connect the Antenna and Receiver. Metal bodies close to the antenna can interfere with radio reception. If the transmitter's range is limited, move the antenna to a more suitable position.
	#	SHIELD	

AUX output configuration
Aux logic= 0 - 2ND RADIO CHANNEL output. Contact stays closed for 1s when 2nd radio channel is activated.
Aux logic= 1 - SCA GATE OPEN LIGHToutput. Contact stays closed during opening and with leaf open, intermittent during closing, open with leaf closed.
Aux logic= 2 - COURTESY LIGHT command output. Contact stays on for 90 seconds after the last operation.
Aux logic= 3 - ZONE LIGHT command output. Contact stays closed for the full duration of operation.
Aux logic= 4 - STAIR LIGHT output. Contact stays closed for 1 second at start of operation.
Aux logic= 5 - GATE OPEN ALARM output. Contact stays closed if the leaf stays open for double the set TCA time.
Aux logic= 6 - FLASHING LIGHT output. Contact stays closed while leaves are operating.
Aux logic= 7 - SOLENOID LATCH output. Contact stays closed for 2 seconds each time gate is opened.
Aux logic= 8 - MAGNETIC LOCK output. Contact stays closed while gate is closed.
Aux logic= 9 - MAINTENANCE output. Contact stays closed once the value set for the Maintenance parameter is reached, to report that maintenance is required.
Aux logic= 10 - FLASHING LIGHT AND MAINTENANCE output. Contact stays closed while leaves are operating. If the value set for the Maintenance parameter is reached, once the gate has finished moving and the leaf is closed, the contact closes for 10 sec. and opens for 5 sec. 4 times to report that maintenance is required.

Note : If no output is configured as 2nd Radio Channel Output, the 2nd radio channel controls the pedestrian opening.

Command input configuration
IC logic= 0 - Input configured as Start E. Operation according to STEP-BY-STEP Pou. logic. External start for traffic light control.
IC logic= 1 - Input configured as Start I. Operation according to STEP-BY-STEP Pou. logic. Internal start for traffic light control.
IC logic= 2 - Input configured as Open. The command causes the leaves to open. If the input stays closed, the leaves stay open until the contact is opened. When the contact is open, the automated device closes following the TCA time, where activated.
IC logic= 3 - Input configured as Closed. The command causes the leaves to close.
IC logic= 4 - Input configured as Ped. The command causes the leaf to open to the pedestrian (partial) opening position. Operation according to STEP-BY-STEP. logic
IC logic= 5 - Input configured as Timer. Operation same as open except closing is guaranteed even after a mains power outage.
IC logic= 6 - Input configured as Timer Ped. The command causes the leaf to open to the pedestrian (partial) opening position. If the input stays closed, the leaf stays open until the contact is opened. If the input stays closed and a Start E, Start I or Open command is activated, a complete opening-closing cycle is performed before returning to the pedestrian opening position. Closing is guaranteed even after a mains power outage.

Safety input configuration
SAFE logic= 0 - Input configured as Phot (photocell) non tested (*). (fig.T, ref.1). Enables connection of devices not equipped with supplementary test contacts. When beam is broken, photocells are active during both opening and closing. When beam is broken during closing, movement is reversed only once the photocell is cleared. If not used, leave jumper inserted.
SAFE logic= 1 - Input configured as Phot test (tested photocell). (fig.T, ref.2). Switches photocell testing on at start of operation. When beam is broken, photocells are active during both opening and closing. When beam is broken during closing, movement is reversed only once the photocell is cleared.
SAFE logic= 2 - Input configured as Phot op (photocell active during opening only) non tested (*). (fig.T, ref.1). Enables connection of devices not equipped with supplementary test contacts. In the event beam is broken, photocell operation is disabled during closing. During opening, stops motion for as long as the photocell beam stays broken. If not used, leave jumper inserted.
SAFE logic= 3 - Input configured as Phot op test (tested photocell active during opening only (fig.T, ref.2). Switches photocell testing on at start of operation. In the event beam is broken, photocell operation is disabled during closing. During opening, stops motion for as long as the photocell beam stays broken.
SAFE logic= 4 - Input configured as Phot cl (photocell active during closing only) non tested (*). (fig.T, ref.1). Enables connection of devices not equipped with supplementary test contacts. In the event beam is broken, photocell operation is disabled during opening. During closing, movement is reversed immediately. If not used, leave jumper inserted.
SAFE logic= 5 - Input configured as Phot cl test (tested photocell active during closing only (fig.T, ref.2). Switches photocell testing on at start of operation. In the event beam is broken, photocell operation is disabled during opening. During closing, movement is reversed immediately.
SAFE logic= 6 - Input configured as Bar (safety edge) non tested (*). (fig.T, ref.3). Enables connection of devices not equipped with supplementary test contacts. The command reverses movement for 2 sec.. If not used, leave jumper inserted.
SAFE logic= 7 - Input configured as Bar (tested safety edge (fig.T, ref.4). Switches safety edge testing on at start of operation. The command reverses movement for 2 sec.
SAFE logic= 8 - Input configured as Bar 8k2 (fig.T, ref.5). Input for resistive edge 8K2. The command reverses movement for 2 sec.
SAFE logic=9 Input configured as Bar op, safety edge with active inversion only while opening, if activated while closing, the automation stops (STOP) (fig.T, ref. 3). Allows connecting devices not fitted with supplementary test contact. The operation while opening causes the movement to be reversed for 2 seconds, the operation while closing causes the automation to stop. If not used, leave jumper inserted.
SAFE logic=10 Input configured as Bar op test, safety edge checked with active inversion only while opening, if activated while closing, the automation stops (STOP) (fig.T, ref. 4). Activates testing safety edges when starting operation. The operation while opening causes the movement to be reversed for 2 seconds, the operation while closing causes the automation to stop.
SAFE logic=11 Input configured as Bar 8k2 op, 8k2 safety edge with active inversion only while opening, if activated while closing, the automation stops (STOP) (fig.T, ref. 5). The operation while opening causes the movement to be reversed for 2 seconds, the operation while closing causes the automation to stop.
SAFE logic=12 Input configured as Bar cl, safety edge with active inversion only while closing, if activated while opening, the automation stops (STOP) (fig.T, ref. 3). Allows connecting devices not fitted with supplementary test contact. The operation while closing causes the movement to be reversed for 2 seconds, the operation while opening causes the automation to stop. If not used, leave jumper inserted.
SAFE logic=13 Input configured as Bar cl test, safety edge checked with active inversion only while closing, if activated while opening, the automation stops (STOP) (fig.T, ref. 4). Activates testing safety edges when starting operation. The operation while closing causes the movement to be reversed for 2 seconds, the operation while opening causes the automation to stop.
SAFE logic=14 Input configured as Bar 8k2 cl, safety edge with active inversion only while closing, if activated while opening, the automation stops (STOP) (fig.T, ref. 5). The operation while closing causes the movement to be reversed for 2 seconds, the operation while opening causes the automation to stop.

(*) If "D" type devices are installed (as defined by EN12453), connect in unverified mode, foresee mandatory maintenance at least every six months.

13.6) LANGUAGE MENU (LANGUAGE)
Used to set the programmer's language on the display.

13.7) AUTOSET MENU (AUTOSET)
- For best results, it is advisable to run the autoset function with the motors idle (i.e. not overheated by a considerable number of consecutive operations).
- Launch an autoset operation by going to the relevant menu.
- As soon as you press the OK button, the"..... ....." message is displayed and the control unit commands the device to perform a full cycle (opening followed by closing), during which the minimum torque value required to move the leaf is set automatically.
  The number of cycles required for the autoset function can range from 1 to 3.
  During this stage, it is important to avoid breaking the photocells' beams and not to use the START and STOP commands or the display.
  Pressing the + and - keys at the same time during this stage stops the automated device and exits the autoset operation, with the message KO appearing on the display.Once this operation is complete, the control unit will have automatically set the optimum torque values. Check them and, where necessary, edit them as described in the programming section.

⚠ WARNING!! Check that the force of impact measured at the points provided for by standard EN 12445 is lower than the value laid down by standard EN 12453.

⚠ Impact forces can be reduced by using deformable edges.

⚠ Warning!! While the autoset function is running, the obstacle detection function is not active. Consequently, the installer must monitor the automated system's movements and keep people and property out of range of the automated system.

INSTALLATION TEST PROCEDURE
1. Run the AUTOSET cycle (*)
2. Check the impact forces: if they fall within the limits (**) skip to point 10 of the procedure, otherwise
3. Where necessary, adjust the speed and sensitivity (force) parameters: see parameters table.
4. Check the impact forces again: if they fall within the limits (**) skip to point 10 of the procedure, otherwise
5. Apply a shock absorber profile
6. Check the impact forces again: if they fall within the limits (**) skip to point 10 of the procedure, otherwise
7. Apply pressure-sensitive or electro-sensitive protective devices (such as a safety edge)
8. Check the impact forces again: if they fall within the limits (**) skip to point 10 of the procedure, otherwise
9. Allow the drive to move only in "Deadman" mode
10. Make sure all devices designed to detect obstacles within the system's operating range are working properly

(*) Before running the autoset function, make sure you have performed all the assembly and make-safe operations correctly, as set out in the installation warnings in the drive's manual.

(**) Based on the risk analysis, you may find it necessary to apply sensitive protective devices anyway

13.8) STATISTICS MENU (START)
Used to view the version of the board, the total number of operations (in hundreds), the number of transmitters memorized and the last 30 errors (the first 2 digits indicate the position, the last 2 give the error code). Error 01 is the most recent.

13.9) PASSWORD MENU (PASSword)
Used to set a password for the board's wireless programming via the U-link network. With "PROTECTION LEVEL" logic set to 1,2,3,4, the password is required to access the programming menus. After 10 consecutive failed attempts to log in, you will need to wait 3 minutes before trying again. During this time, whenever an attempt is made to log in, the display will read "BLOC". The default password is 1234.

14) CONNECTION WITH EXPANSION BOARDS AND UNIVERSAL HANDHELD PROGRAMMER VERSION> V1.40 (Fig. O) Refer to specific manual.

WARNING! Incorrect settings can result in damage to property and injury to people and animals.

15) U-LINK OPTIONAL MODULES
Refer to the U-link instructions for the modules.

15.1) REFER TO THE U-LINK MODULE'S INSTRUCTIONS (FIG.R).
Refer to the U-link instructions for the modules.
NOTE: On the board set as the Slave, the Safety Edge input (Safety Edge/ Test Safety Edge/ 8k2 Safety Edge) should only be set to SAFE2.

16) REVERSING THE OPENING DIRECTION (Fig.U)

17) RESTORING FACTORY SETTINGS (Fig.S)
WARNING: this operation will restore the control unit's factory settings and all transmitters stored in its memory will be deleted.
WARNING! Incorrect settings can result in damage to property and injury to people and animals.
- Cut off power to the board (Fig.S ref.1)
- Open the Stop input and press the - and OK keys together (Fig.S ref.2)
- Switch on the board's power (Fig.S ref.3)
- The display will read RST; confirm within 3 sec. by pressing the OK key (Fig.S ref.4)
- Wait for the procedure to finish (Fig.S ref.5)
- Procedure finished (Fig.S ref.6)

ENGLISH

TABLE "A" - PARAMETERS MENU - (PArAM)

Parameter	min.	max.	Default	Personal	Definition	Description
tcA	0	120	10		**Automatic closing time [s]**	Waiting time before automatic closing.
trF.LGht. clr.t	1	180	40		**Time-to-clear traffic light zone [s]**	Time-to-clear for the zone run through by traffic controlled by the traffic light.
oPd 1St. SLoUd	1(***)	50	10		**Slow-down distance during opening [%]**	Slow-down distance for motor(s) during opening, given as a percentage of total travel. **WARNING: Once the parameter has been edited, a complete uninterrupted opening-closing cycle is required.** **WARNING: when the display reads "SET", obstacle detection is not active.**
cLd 1St. SLoUd	1(***)	50	10		**Slow-down distance during closing [%]**	Slow-down distance for motor(s) during closing, given as a percentage of total travel. **WARNING: Once the parameter has been edited, a complete uninterrupted opening-closing cycle is required.** **WARNING: when the display reads "SET", obstacle detection is not active.**
PArt IAL oPEn InG	10	99	20		**Partial opening [%]**	Partial opening distance as a percentage of total opening following activation of PED pedestrian command.
oP.ForcE	1	99	50		**Leaf force during opening [%]**	Force exerted by leaf/leaves during opening. This is the percentage of force delivered, beyond the force stored during the autoset cycle (and subsequently updated), before an obstacle alarm is generated. The parameter is set automatically by the autoset function. **WARNING: It affects impact force directly: make sure that current safety requirements are met with the set value (*). Install anti-crush safety devices where necessary (**).**
cLS.ForcE	1	99	50		**Leaf force during closing [%]**	Force exerted by leaf/leaves during closing. This is the percentage of force delivered, beyond the force stored during the autoset cycle (and subsequently updated), before an obstacle alarm is generated. The parameter is set automatically by the autoset function. **WARNING: It affects impact force directly: make sure that current safety requirements are met with the set value (*). Install anti-crush safety devices where necessary (**).**
oP.SLUdForcE	1	99	50		**Leaf/leaves force during opening during slow-down**	"Force exerted by leaf/leaves during opening at slow-down speed." This is the percentage of force delivered, beyond the force stored during the autoset cycle (and subsequently updated), before an obstacle alarm is generated. The parameter is set automatically by the autoset function. **WARNING: It affects impact force directly: make sure that current safety requirements are met with the set value (*). Install anti-crush safety devices where necessary (**).**
cLS.SLUd. ForcE	1	99	50		**Leaf/leaves force during closing during slow-down [%]**	"Force exerted by leaf/leaves during closing at slow-down speed. " This is the percentage of force delivered, beyond the force stored during the autoset cycle (and subsequently updated), before an obstacle alarm is generated. The parameter is set automatically by the autoset function. **WARNING: It affects impact force directly: make sure that current safety requirements are met with the set value (*). Install anti-crush safety devices where necessary (**).**
oP SPEEd	15	99	99		**Opening speed [%}**	Percentage of maximum speed that can be reached by motor(s) during opening. **WARNING: Once the parameter has been edited, a complete uninterrupted opening-closing cycle is required. WARNING: when the display reads "SET", obstacle detection is not active.**
cL SPEEd	15	99	99		**Closing speed [%]**	Percentage of maximum speed that can be reached by motor(s) during closing. **WARNING: Once the parameter has been edited, a complete uninterrupted opening-closing cycle is required. WARNING: when the display reads "SET", obstacle detection is not active.**
SLoU SPEEd	15	30	25		**Slow-down speed [%]**	Opening and closing speed of motor(s) during slow-down stage, given as a percentage of maximum running speed. **WARNING: Once the parameter has been edited, a complete uninterrupted opening-closing cycle is required. WARNING: When the display reads ""SET"", obstacle detection is not active.**
MAIntEnAncE	0	250	0		Programming number of operations for maintenance threshold [in hundreds]	Allows you to set a number of operations after which the need for maintenance will be reported on the AUX output configured as Maintenance or Flashing Light and Maintenance .

(*) In the European Union, apply standard EN 12453 for force limitations, and standard EN 12445 for measuring method.
(**) Impact forces can be reduced by using deformable edges.
(***) If the calculated value is less than 30 cm, it is set to 30 cm.

TABLE "B" - LOGIC MENU - (LoG Ic)

Logic	Definition	Default	Cross out setting used	Optional extras
tcA	**Automatic Closing Time**	0	0	Logic not enabled
			1	Switches automatic closing on
FASt cLS.	**Fast closing**	0	0	Logic not enabled
			1	Closes 3 seconds after the photocells are cleared before waiting for the set TCA to elapse.
StEP-by-StEP MouEMnt	**Step-by-step movement**	0	0	Inputs configured as Start E, Start I, Ped operate with 4-step logic.
			1	Inputs configured as Start E, Start I, Ped operate with 3-step logic. Pulse during closing reverses movement.
			2	Inputs configured as Start E, Start I, Ped operate with 2-step logic. Movement reverses with each pulse.
PrE-ALArM	**Pre-alarm**	0	0	The flashing light comes on at the same time as the motor(s) start.
			1	The flashing light comes on approx. 3 seconds before the motor(s) start.
hoLd-to-rUn	**Deadman**	0	0	Pulse operation.
			1	Deadman mode. Input 61 is configured as OPEN UP. Input 62 is configured as CLOSE UP. Operation continues as long as the OPEN UP or CLOSE UP keys are held down. ⚠ **WARNING: safety devices are not enabled.**
			2	Emergency Deadman mode. Usually pulse operation. If the board fails the safety device tests (photocell or safety edge, Er0x) 3 times in a row, Deadman mode is enabled which will stay active for 1 minute after the OPEN UP - CLOSE UP keys are released. Input 61 is configured as OPEN UP. Input 62 is configured as CLOSE UP. ⚠ **WARNING: with the device set to Emergency Deadman mode, safety devices are not enabled.**
ibL oPEn	**Block pulses during opening**	0	0	Pulse from inputs configured as Start E, Start I, Ped has effect during opening.
			1	Pulse from inputs configured as Start E, Start I, Ped has no effect during opening.
* ibL tcA	**Block pulses during TCA**	0	0	Pulse from inputs configured as Start E, Start I, Ped has effect during TCA pause.
			1	Pulse from inputs configured as Start E, Start I, Ped has no effect during TCA pause.
ibL cLoSE	**Block pulses during closing**	0	0	Pulse from inputs configured as Start E, Start I, Ped has effect during closing.
			1	Pulse from inputs configured as Start E, Start I, Ped has no effect during closing.
IcE	**Ice feature**	0	0	The Amperostop safety trip threshold stays at the same set value.
			1	The controller automatically adjusts the obstacle alarm trip threshold at each start up. Check that the force of impact measured at the points provided for by standard EN 12445 is lower than the value laid down by standard EN 12453. If in doubt, use auxiliary safety devices. This feature is useful when dealing with installations running at low temperatures. WARNING: once this feature has been activated, you will need to perform an autoset opening and closing cycle.
oPEn In othEr dIrEct.	**Open in other direction**	0	0	Standard operating mode (See Fig.U Ref. 1).
			1	Opens in other direction to standard operating mode (See Fig. U Ref.2)
SAFE 1	**Configuration of safety input SAFE 1. 72**	0	0	Input configured as Phot (photocell).
			1	Input configured as Phot test (tested photocell).
			2	Input configured as Phot op (photocell active during opening only).
			3	Input configured as Phot op test (tested photocell active during opening only).
SAFE 2	**Configuration of safety input SAFE 2. 74**	6	4	Input configured as Phot cl (photocell active during closing only).
			5	Input configured as Phot cl test (tested photocell active during closing only).
			6	Input configured as Bar, safety edge.
			7	Input configured as Bar, tested safety edge.
			8	Input configured as Bar 8k2.
			9	Input configured as Bar OP, safety edge with inversion active only while opening. If while closing, the movement stops.
			10	Input configured as Bar OP TEST, safety edge tested with inversion active only while opening. If while closing, the movement stops.
			11	Input configured as Bar OP 8k2, safety edge with inversion active only while opening. If while closing, the movement stops.
			12	Input configured as Bar CL, safety edge with inversion active only while closing. If while opening, the movement stops.
			13	Input configured as Bar CL TEST, safety edge tested with inversion active only while closing. If while opening, the movement stops.
			14	Input configured as Bar CL 8k2, safety edge with inversion active only while closing. If while opening, the movement stops.

step-by-step mov.

	2 STEP	3 STEP	4 STEP
CLOSED	OPENS	OPENS	OPENS
DURING CLOSING			STOPS
OPEN	CLOSES	CLOSES	CLOSES
DURING OPENING		STOP + TCA	STOP + TCA
AFTER STOP	OPENS	OPENS	OPENS

Logic	Definition	De-fault	Cross out setting used	Optional extras
Ic 1	**Configuration of command input IC 1. 61**	0	0	Input configured as Start E.
			1	Input configured as Start I.
			2	Input configured as Open.
			3	Input configured as Close.
Ic 2	**Configuration of command input IC 2. 62**	4	4	Input configured as Ped.
			5	Input configured as Timer.
			6	Input configured as Timer Pedestrian.
AUX 0	**Configuration of AUX 0 output. 20-21**	6	0	Output configured as 2nd Radio Channel.
			1	Output configured as SCA (gate open light).
			2	Output configured as Courtesy Light command.
			3	Output configured as Zone Light command.
AUX 3	**Configuration of AUX 3 output. 26-37**	0	4	Output configured as Stair Light
			5	Output configured as Alarm
			6	Output configured as Flashing light
			7	Output configured as Latch
			8	Output configured as Magnetic lock
			9	Output configured as Maintenance
			10	Output configured as Flashing Light and Maintenance.
FIXEd codE	**Fixed code**	0	0	Receiver is configured for operation in rolling-code mode. Fixed-Code Clones are not accepted.
			1	Receiver is configured for operation in fixed-code mode. Fixed-Code Clones are accepted.
ProtEct Ion LEvEL	**Setting the protection level**	0	0	A - The password is not required to access the programming menus B - Enables wireless memorizing of transmitters. Operations in this mode are carried out near the control panel and do not require access: - Press in sequence the hidden key and normal key (T1-T2-T3-T4) of a transmitter that has already been memorized in standard mode via the radio menu. - Press within 10 sec. the hidden key and normal key (T1-T2-T3-T4) of a transmitter to be memorized. The receiver exits programming mode after 10 sec.: you can use this time to enter other new transmitters by repeating the previous step. C - Enables wireless automatic addition of clones. Enables clones generated with the universal programmer and programmed Replays to be added to the receiver's memory. D - Enables wireless automatic addition of replays. Enables programmed Replays to be added to the receiver's memory. E - The board's parameters can be edited via the U-link network
			1	A - You are prompted to enter the password to access the programming menus The default password is 1234. No change in behaviour of functions B - C - D - E from 0 logic setting
			2	A - You are prompted to enter the password to access the programming menus The default password is 1234. B - Wireless memorizing of transmitters is disabled. C - Wireless automatic addition of clones is disabled. No change in behaviour of functions D - E from 0 logic setting
			3	A - You are prompted to enter the password to access the programming menus The default password is 1234. B - Wireless memorizing of transmitters is disabled. D - Wireless automatic addition of Replays is disabled. No change in behaviour of functions C - E from 0 logic setting
			4	A - You are prompted to enter the password to access the programming menus The default password is 1234. B - Wireless memorizing of transmitters is disabled. C - Wireless automatic addition of clones is disabled. D - Wireless automatic addition of Replays is disabled. E - The option of editing the board's parameters via the U-link network is disabled. Transmitters are memorized only using the relevant Radio menu. IMPORTANT: This high level of security stops unwanted clones from gaining access and also stops radio interference, if any.
SEr IAL ModE	**Serial mode** (Identifies how board is configured in a BFT network connection).	0	0	Standard SLAVE: board receives and communicates commands/diagnostics/etc.
			1	Standard MASTER: board sends activation commands (START, OPEN, CLOSE, PED, STOP) to other boards.
			2	SLAVE opposite leaves in local network : the control unit is the slave in an opposite leaves network with no smart module (fig.R)
			3	MASTER opposite leaves in local network: the control unit is the master in an opposite leaves network with no smart module (fig.R)
AddrESS	**Address**	0	[____]	Identifies board address from 0 to 119 in a local BFT network connection. (see U-LINK OPTIONAL MODULES section)

Logic	Definition	De-fault	Cross out setting used	Optional extras
EXP I1	**Configuration of EXPI1 input on input-output expansion board. 1-2**	1	0	Input configured as Start E command.
			1	Input configured as Start I command.
			2	Input configured as Open command.
			3	Input configured as Close command.
			4	Input configured as Ped command.
			5	Input configured as Timer command.
			6	Input configured as Timer Pedestrian command.
			7	Input configured as Phot (photocell) safety.
			8	Input configured as Phot op safety (photocell active during opening only).
			9	Input configured as Phot cl safety (photocell active during closing only).
			10	Input configured as Bar safety (safety edge).
			11	Input configured as safety Bar OP, safety edge with inversion active only while opening, if while closing the movement stops.
			12	Input configured as safety Bar CL, safety edge with inversion active only while closing, if while opening the movement stops.
			13	Input configured as Phot test safety, tested photocell. Input 3 (EXPI2) on input/output expansion board is switched automatically to safety device test input, EXPFAULT1.
			14	Input configured as Phot op test safety, tested photocell active only while opening. Input 3 (EXPI2) on input/output expansion board is switched automatically to safety device test input, EXPFAULT1
			15	Input configured as Phot cl test safety, tested photocell active only while closing. Input 3 (EXPI2) on input/output expansion board is switched automatically to safety device test input, EXPFAULT1
			16	Input configured as Bar safety, tested safety edge. Input 3 (EXPI2) on input/output expansion board is switched automatically to safety device test input, EXPFAULT1.
			17	Input configured as safety Bar OP test, safety edge with inversion active only while opening, if while closing the movement stops. Input 3 (EXPI2) on input/output expansion board is switched automatically to safety device test input, EXPFAULT1.
			18	Input configured as safety Bar CL test, safety edge with inversion active only while closing, if while opening the movement stops. Input 3 (EXPI2) on input/output expansion board is switched automatically to safety device test input, EXPFAULT1.
EXP I2	**Configuration of EXPI2 input on input-output expansion board. 1-3**	0	0	Input configured as Start E command.
			1	Input configured as Start I command.
			2	Input configured as Open command.
			3	Input configured as Close command.
			4	Input configured as Ped command.
			5	Input configured as Timer command.
			6	Input configured as Timer Pedestrian command.
			7	Input configured as Phot (photocell) safety.
			8	Input configured as Phot op safety (photocell active during opening only).
			9	Input configured as Phot cl safety (photocell active during closing only).
			10	Input configured as Bar safety (safety edge).
			11	Input configured as safety Bar OP, safety edge with inversion active only while opening, if while closing the movement stops.
			12	Input configured as safety Bar CL, safety edge with inversion active only while closing, if while opening the movement stops.
EXPo 1	**Configuration of EXPO2 output on input-output expansion board 4-5**	11	0	Output configured as 2nd Radio Channel.
			1	Output configured as SCA (gate open light).
			2	Output configured as Courtesy Light command.
			3	Output configured as Zone Light command.
			4	Output configured as Stair Light.
EXPo2	**Configuration of EXPO2 output on input-output expansion board 6-7**	11	5	Output configured as Alarm.
			6	Output configured as Flashing light.
			7	Output configured as Latch.
			8	Output configured as Magnetic lock.
			9	Output configured as Maintenance.
			10	Output configured as Flashing Light and Maintenance.
			11	Output configured as Traffic Light control with TLB board.
trAFFic LIGht PrEFLASh inG.	**Traffic light pre-flashing**	0	0	Pre-flashing switched off.
			1	Red lights flash, for 3 seconds, at start of operation.
trAFFic LIGht rEd LAMP ALWAYS on	**Steadily lit red light**	0	0	Red lights off when gate closed.
			1	Red lights on when gate closed.

ENGLISH

TABLE "C" – RADIO MENU (rAd Io)

Logic	Description
Add StArt	**Add Start Key** associates the desired key with the Start command
Add 2ch	**Add 2ch Key** Associates the desired key with the 2nd radio channel command. If no output is configured as 2nd Radio Channel Output, the 2nd radio channel controls the pedestrian opening.
ErASE 64	**Erase List** ⚠ **WARNING!** Erases all memorized transmitters from the receiver's memory.
cod rH	**Read receiver code** Displays receiver code required for cloning transmitters.
uK	**ON =** Enables remote programming of cards via a previously memorized W LINK transmitter. It remains enabled for 3 minutes from the time the W LINK transmitter is last pressed. **OFF=** W LINK programming disabled.

ACCES AUX MENUS Fig. 1

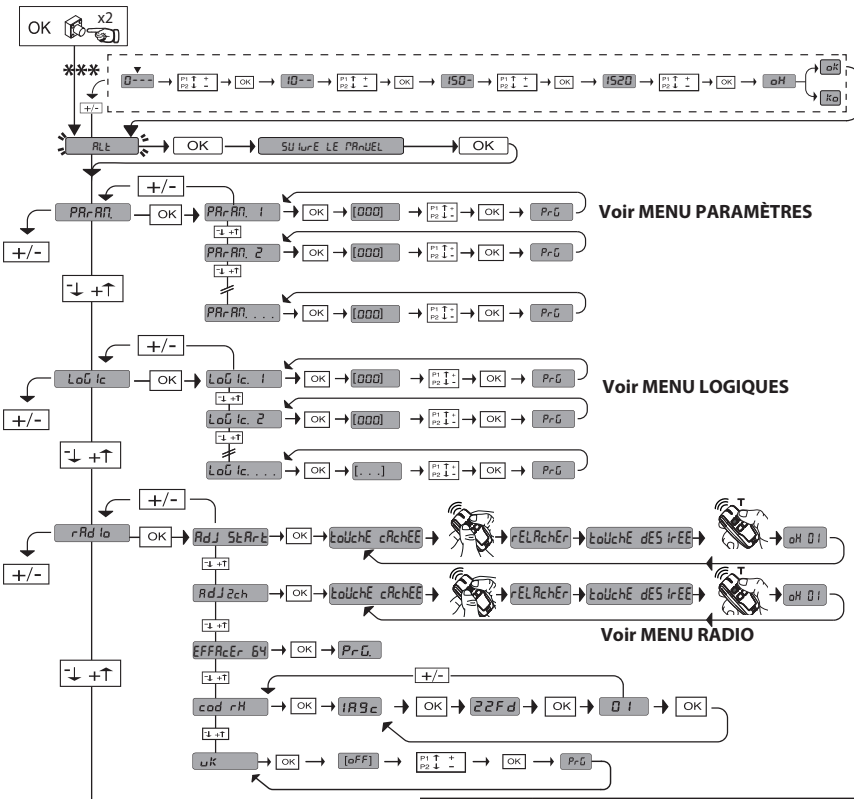

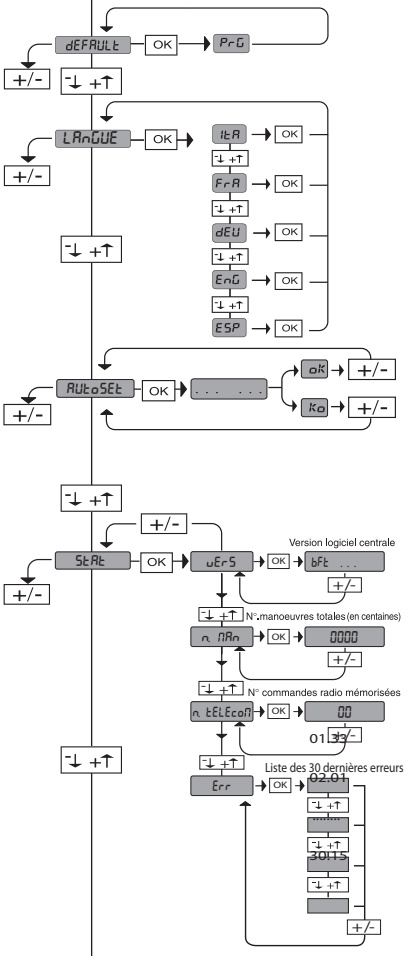

Code de diagnostic	Description	Remarque
StrE	Activation entrée Start externe START E	
Str I	Activation entrée Start interne START I	
oPEn	Activation entrée OPEN	
cLS	Activation entrée CLOSE	
PEd	Activation entrée piéton PED	
t IME	Activation entrée TIMER	
StoP	Activation entrée STOP	
Phot	Activation entrée photocellule PHOT	
PhoP	Activation entrée photocellule en ouverture PHOT OP	
PhcL	Activation entrée photocellule en fermeture PHOT CL	
bAr	Activation entrée linteau BAR	
bAr 2	Activation entrée linteau BAR sur moteur slave (connexion vantaux opposés)	
bArO	Activation entrée linteau BAR avec inversion ACTIVE UNIQUEMENT A L'OUVERTURE ou si configurée comme linteau sensible vérifié. Activation de l'entrée FAULT associée	
bArC	Activation entrée linteau BAR avec inversion ACTIVE UNIQUEMENT A LA FERMETURE ou si configurée comme linteau sensible vérifié. Activation de l'entrée FAULT associée	
SWC	Activation entrée fin de course fermeture du moteur SWC	
SWO	Activation entrée fin de course ouverture du moteur SWO	
SEt	La carte attend d'accomplir une manœuvre complète d'ouverture-fermeture sans être interrompue par des arrêts intermédiaires pour obtenir le couple nécessaire au mouvement. ATTENTION! La détection de l'obstacle n'est pas active	
rLS	Activation du déblocage mécanique du moteur. La manœuvre suivante sera effectuée à basse vitesse.	
Er01	Essai photocellules échoué	Vérifier connexion photocellules et/ou configurations logiques
Er02	Essai linteau échoué	Vérifier connexion linteaux et/ou configurations logiques
Er03	Essai photocellules ouverture échoué	vérifier connexion photocellules et/ou configuration paramètres/logiques
Er04	Essai photocellules fermeture échoué	vérifier connexion photocellules et/ou configuration paramètres/logiques
Er05	Essai linteau sur moteur slave échoué (connexion vantaux opposés)	Vérifiez connexion linteau et/ou configurations paramètres/logiques
Er06	Essai linteau 8k2 échoué	Vérifier connexion linteau et/ou configurations paramètres/logiques
Er07	Essai linteau ouverture échoué	Vérifiez connexion linteau et/ou configurations paramètres/logiques
Er08	Essai linteau fermeture échoué	Vérifiez connexion linteau et/ou configurations paramètres/logiques
Er 1H**	Erreur essai matériel carte	- Vérifier les connexions sur le moteur - Problèmes matériels sur la carte (s'adresser au SAV)
Er3H**	Inversion pour obstacle - Amperostop	Vérifier éventuels obstacles le long du parcours
Er4H*	Thermique	Attendre le refroidissement de l'automatisation
Er5H**	Erreur communication avec dispositifs à distance	Vérifier la connexion sur les dispositifs accessoires et/ou les cartes d'expansion connectés via série
Er70, Er71 Er74, Er75	Erreur interne de contrôle supervision système.	Essayer d'éteindre et rallumer la carte. Si le problème persiste contacter le service après-vente.
Er72	Erreur de consistance des paramètres de centrale (Logiques et Paramètres)	Si vous appuyez sur OK vous confirmez les configurations détectées La carte continuera à fonctionner avec les configurations détectées. **⚠ Il faut vérifier les configurations de la carte (Paramètres et Logiques).**
Er73	Erreur dans les paramètres de D-track	Si vous appuyez sur OK la carte continuera à fonctionner avec D-track par défaut. **⚠ Il faut procéder à une auto-configuration**
ErF0	Erreur fin de course	Vérifier connexions des fins de course
ErF1	Erreur fin de course toujours active après le début de la manœuvre	Vérifiez connexions fins de course, connexions moteur
ErF3	erreur de la configuration des entrées SAFE	Vérifiez la bonne configuration des entrées SAFE

* H = 0,1,…,9,A,B,C,D,E,F

FRANÇAIS

BFT Spa www.bft-automation.com
Via Lago di Vico, 44 **ITALY**
36015 Schio (VI)
T +39 0445 69 65 11
F +39 0445 69 65 22

SPAIN www.bftautomatismos.com
BFT GROUP ITALIBERICA DE AUTOMATISMOS S.L.
08401 Granollers - (Barcelona)

FRANCE www.bft-france.com
AUTOMATISMES BFT FRANCE
69800 Saint Priest

GERMANY www.bft-torantriebe.de
BFT TORANTRIEBSSYSTEME Gmb H
90522 Oberasbach

BENELUX www.bftbenelux.be
BFT BENELUX SA
1400 Nivelles

UNITED KINGDOM www.bft.co.uk
- **BFT Automation UK Limited**
Unit C2-C3, The Embankment Business Park, Vale Road, Heaton Mersey, Stockport, SK4 3GL
- **BFT Automation (South) Limited**
Enterprise House, Murdock Road, Dorcan, Swindon, SN3 5HY

PORTUGAL www.bftportugal.com
BFT SA - COMERCIO DE AUTOMATISMOS E MATERIAL DE SEGURANCIA
3026-901 Coimbra

POLAND www.bft.pl
BFT POLSKA SP.ZO.O.
Marecka 49, 05-220 Zielonka

IRELAND www.bftautomation.ie
BFT AUTOMATION LTD
Unit D3, City Link Business Park, Old Naas Road, Dublin 12

CROATIA www.bft.hr
BFT ADRIA D.O.O.
51218 Drazice (Rijeka)

CZECH REPUBLIC www.bft.it
BFT CZ S.R.O.
Praha

TURKEY www.bftotomasyon.com.tr
BFT OTOMATIK KAPI SISTEMELERI SANAY VE
Istanbul

RUSSIA www.bftrus.ru
BFT RUSSIA
111020 Moscow

AUSTRALIA www.bftaustralia.com.au
BFT AUTOMATION AUSTRALIA PTY LTD
Wetherill Park (Sydney)

U.S.A. www.bft-usa.com
BFT USA
Boca Raton

CHINA www.bft-china.cn
BFT CHINA
Shanghai 200072

UAE www.bftme.ae
BFT Middle East FZCO
Dubai